Benefits of Halogen Systems (HSI) Sensor

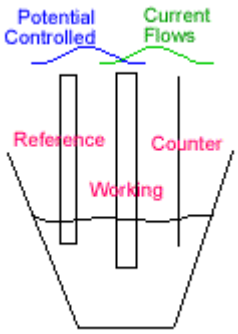

Figure 1: 3 electrode amperometric cell

Background

HSI's TRO sensor has a number of advantages when used in seawater electrochlorination systems. Existing membrane amperometric and reagent feed systems have serious drawbacks in this application. Flow independence, self-cleaning electrodes and long calibration retention are the HSI TRO Sensor's greatest strengths.

Amperometric Measurement

We use the three-electrode technique for measurement. A constant potential is applied to working electrode (cathode) that reduces the chlorine (or bromine in this case) to chloride (bromide). This is the reverse of what happens in a chlorine generator. The potential (voltage) is supplied from the counter (or auxiliary) electrode. The potential is "referenced" to a virtual (or floating ground) by the reference electrode.

The resulting measured current corresponds linearly to the TRO level. Our sensor signal is roughly 800 to 1000 nanoamps (nA) per PPM of TRO. The resolution of our electronics is 1 nA.

Flow Independent

We use a magnetically coupled pump in the sensor tip to provide a fixed constant flow across the electrodes. All amperometric sensors are flow sensitive. By providing a high, constant velocity, we improve the sensitivity and the signal to noise ratio for lower TRO detection levels. The sensor is capable of measurements at velocities from zero to 4.5 meters per second with less than a 5% change in signal. The integrated pump uses a Three Phase Brushless DC motor with a 20,000 hour life. The impeller is molded from an engineered polymer formulation with low friction and long life.

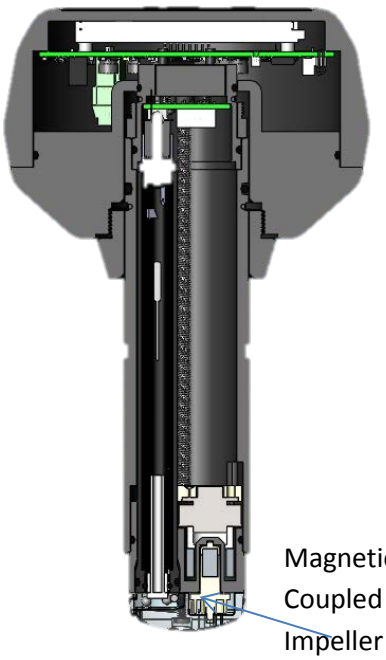

No Membranes or Electrolyte

Bare Electrodes used for the measurement without the need to replace clogged membranes or replenish electrolyte required by conventional amperometric sensors. This results in much lower maintenance requirements. In competing amperometric sensors, diluted electrolyte requires periodic sensor recalibration to compensate for this.

Passivation Prevention Technique

An electrochemical stabilization technique is used to prevent passivation of the electrodes. Passivation is a common problem with bare electrode amperometric sensors. This enables the sensor to stabilize and provide

accurate readings, usually within one to two minutes. Other competing bare electrode sensors require up to 24 hours after start up for reliable readings.

Self- Cleaning

The sensor has a cleaning feature. Polymeric beads are captured within the sensor and abrade the electrodes to minimize biofouling and remove calcium carbonate that deposits on the electrodes during operation in seawater. The beads are motivated by the flow from the internal pump.

Noise Immunity

Since the signal conditioning circuitry is on the sensor, noise does not enter analog signal cables since there aren't any. Our sensor uses the differential technique incorporating a floating ground to isolate it from stray currents in the water from other machinery. These would otherwise be injected into the sensor. Only digital signals are carried by the sensor cable.

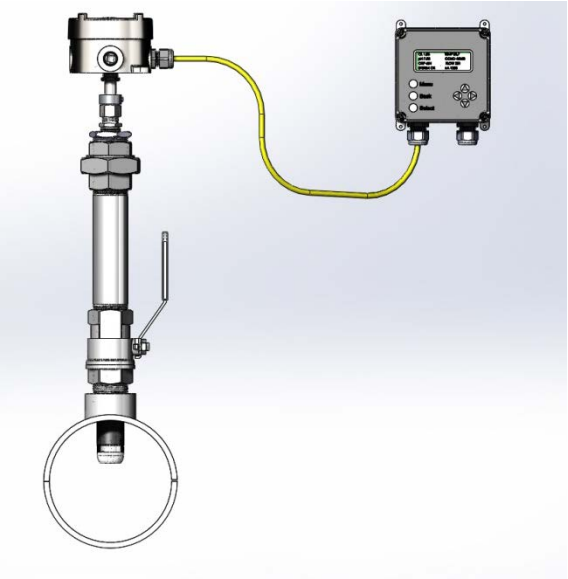

No Reagents or Waste Stream

Colorimetric systems require reagent replenishment every month as well as periodic replacement of pump and optical components. These can be difficult to troubleshoot and the tubing is subject to biofouling. Additionally, the optical cell must be cleaned every few weeks. Reagent and parts can exceed $600 per year excluding labor. Perhaps the most serious drawback results from the potential for a maintenance failure. To the colorimetric system, almost any of these failure modes look like a low or no TRO condition. Hence over chlorination can occur causing corrosion and regulatory problems. In contract, long Intervals without calibration are possible with HSI's sensor.

Four Parameters Measured Every Minute

HSI's sensor measures four different parameters every minute: TRO, Oxidation Reduction Potential-ORP, Conductivity and Temperature. Most colorimetric analyzers only measure a single parameter every two minutes. This can present a problem when these systems are used in a control loop. HSI's sensor also measures ORP and conductivity. These are also used as a "no water" detector to shut the sensor down and provide an error code condition signal to the control system PLC. This makes our sensor more intelligent that a single parameter colorimeter. This enables shut down of the internal pump to prevent operation during these conditions for longer life.

Direct Pipe Insertion

HSI has the only TRO sensor capable of direct insertion into a pipe. This coupled with the elimination of the need for a waste stream simplifies the installation and maintenance. The Hot Tap version is shown at right. This enables removal of the sensor from the plumbing without the need to shut off or drain plumbing. Simply loosen the compression coupling, withdraw the sensor and close the valve (not

shown- valve is still open). A union at the upper portion enables removal for maintenance or troubleshooting.

Low Limit of Detection

Hach evaluated the TRO measurement in our lab and determined it to be 0.02 ppm for the Method Detection Level (limit of detection). This compares favorably with colorimetric systems.

Rapid Response ORP

The sensor measures ORP using a technique that prevents passivation of the ORP electrode. This is a common occurrence when using ORP. One of our customers was using a discrete ORP sensor to monitor their ozone production (which oxidizes bromide in seawater to TRO) in a desalination pretreatment system. Due to electrode poisoning, after ozonation, the ORP sensor remained at 650 millivolts for twenty minutes after the ozonation stopped. Our sensor saw the drop in ORP within one minute after the ozonation stopped.

Solid State Reference or pH Measurement Option

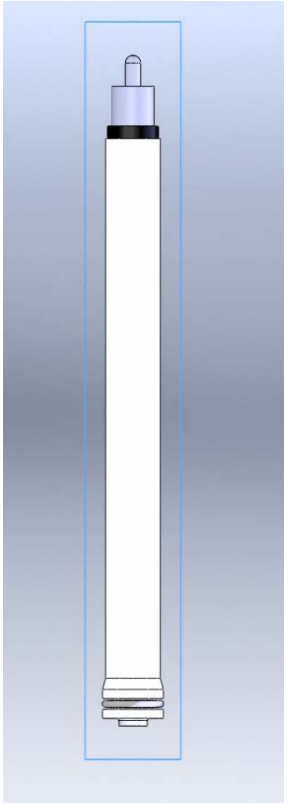

We have three pH options:

1. No pH- we use a solid-state reference electrode (the third amperometric electrode) instead of a pH electrode. This has an advantage in ballast treatment systems where the sensor may remain dry for several weeks at a time. There is no pH electrolyte to dry out or a pH glass to rehydrate. However, if ships operate in freshwater, this is not a good solution. At wet reference or pH sensor should be used instead.
2. Wet Reference- this is used when ships will operated in seawater and brackish water >5,000 µS of conductivity.
3. Differential pH is used in fresh water where the residual will be chlorine instead of bromine as in seawater.

In conclusion, we have overcome many of the limitations of the existing technologies in the measurement to TRO in seawater.